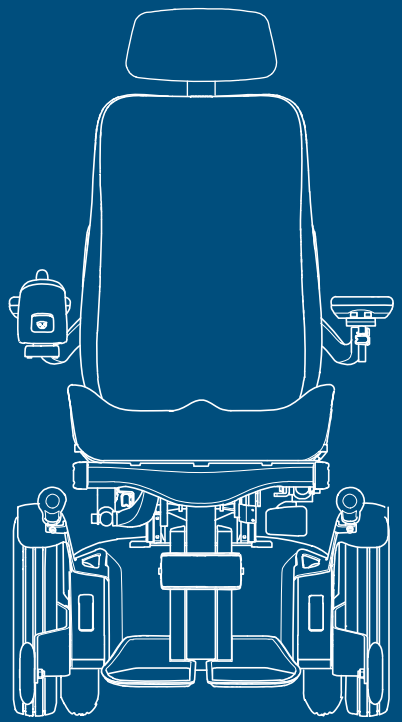

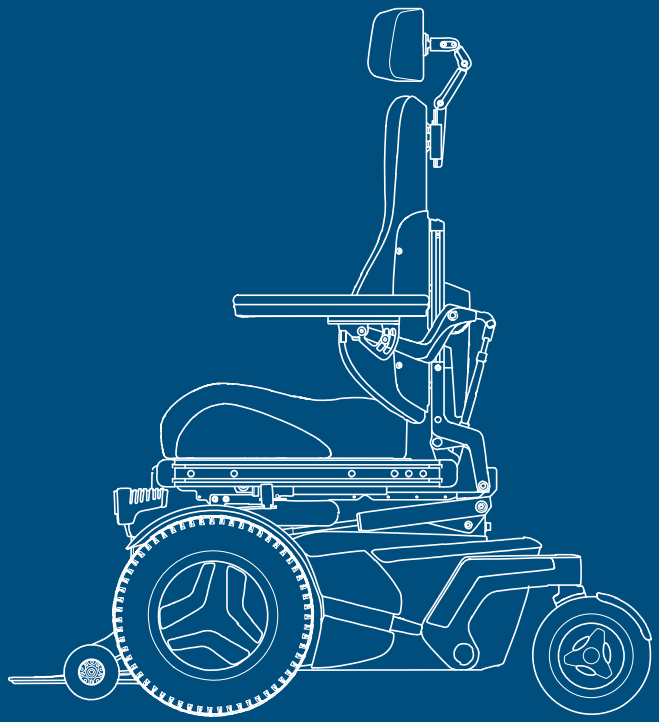

F5 Corpus

User manual | British English

Welcome to the Permobil family

We hope that you enjoy your new powered wheelchair. Permobil's founder, Dr. Per Uddén, believed that every person has the right to have his or her disability compensated as far as possible using the same technology that we all use in our everyday life. Your new wheelchair is a state-of-the-art medical device designed to achieve this goal by providing unparalleled convenience, comfort, and technology.

Produced and published by Permobil
Edition: 6
Date: 2021-05-24
Order no: 335322 eng-UK

How to contact Permobil

Permobil Ltd.
Regus 6th floor, 2 Kingdom Street, Paddington
W2 6BD, London
United Kingdom

+44 1484 722 888
+44 1484 723 013
info@permobil.uk
www.permobil.com

Production units. See page 71.
Local offices. See page 72.

Head office of the Permobil group

Permobil AB
Per Uddéns väg 20
SE 861 36 Timrå
Sweden

+46 60 59 59 00
info@permobil.com
www.permobil.com

1 Introduction 4

2 Overview 5

2.1 Wheelchair specification 6
2.2 Tool bag 7
2.3 General control panel 8
2.4 Omni2 9
2.5 Connected wheelchair 10
2.6 Lights and reflectors 11
2.7 Wheels 12
2.8 Tie-down points 13
2.9 Serial number label 14
2.10 Accessories 15
2.11 Spare parts 16
2.12 User manual 17

3 Safety 18

3.1 Types of warning signs 18
3.2 Warning signs 18
3.3 Labels 22

4 Wheelchair usage 24

4.1 Driving the wheelchair 24
4.2 Support wheels 28
4.3 Seat functions 28
4.4 Charging the batteries 32
4.5 Freewheel mode 33
4.6 Vehicle transportation 33
4.7 Air transportation 37
4.8 Rail transportation 38
4.9 Main circuit breaker 39
4.10 Wheelchair storage 39
4.11 Manual adjustments 40
4.11.1 Headrest 40
4.11.2 Headrest with link hardware 42
4.11.3 Backrest tilt 44
4.11.4 Removing the backrest 45
4.11.5 Armrest 45
4.11.6 Leg rest tilt 50
4.11.7 Footplates 50
4.11.8 Lumbar support 52
4.11.9 Trunk support 53
4.11.10 Knee support 54
4.11.11 Rotational panel holder 55
4.11.12 Parallel panel holder 57
4.11.13 Positioning belt 59

5 Maintenance 60

5.1 Maintenance and inspection schedule 61
5.2 Cleaning 63
5.3 Inflating the drive wheel tyres 64
5.4 Inflating the castor wheel tyres 65
5.5 Positioning belt 65

6 Restrictions and limitations 66

7 Troubleshooting 67

8 General information 69

8.1 Guarantee 69
8.2 Standards and regulations 69
8.3 Reporting incidents 69
8.4 Disposal and recycling 69
8.5 Technical specifications 70

1 Introduction

Before you use your wheelchair for the first time, you must read and understand the contents of this user manual. It instructs you on how to properly and safely use and care for your wheelchair. This user manual and additional information concerning our products are available at www.permobil.com or by telephone.

Your powered wheelchair is a complex medical device prescribed to you by your healthcare provider and configured to meet your needs. Permobil is not responsible for inappropriate prescription or selection of models or features, or for improper use of or modifications to the wheelchair.

2 Overview

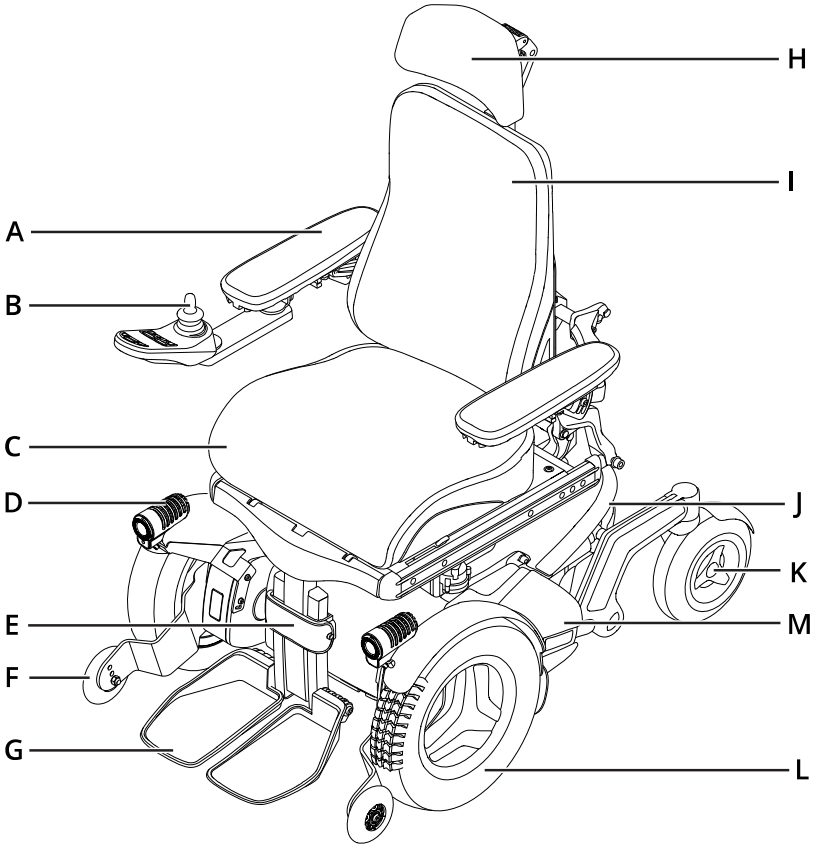

This chapter gives you an overview of your wheelchair. The parts in the overview illustration are described in more detail throughout the manual.

The Permobil F5 Corpus is a front-wheel drive power wheelchair for outdoor and indoor driving. It is intended for people limited to a seated position.

The expected service life of this product is five years.

A. Armrest
B. Control panel
C. Seat
D. Light
E. Leg support
F. Support wheel
G. Footplate
H. Headrest
I. Backrest
J. Chassis
K. Castor wheel
L. Drive wheel
M. Serial number label

2.1 Wheelchair specification

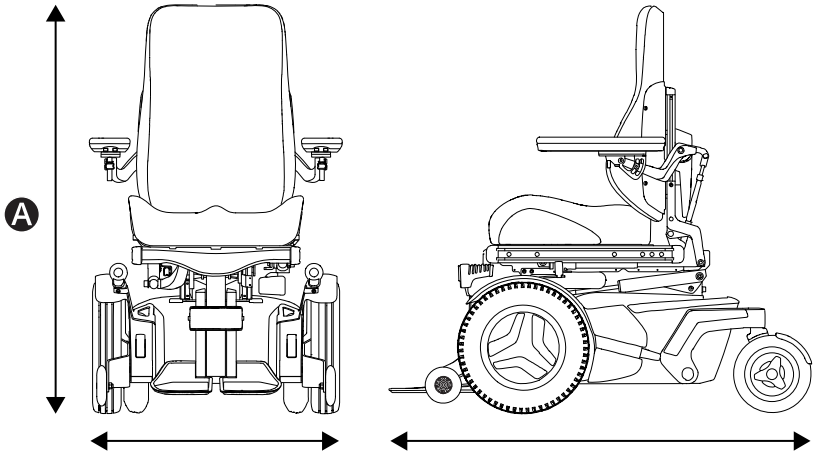

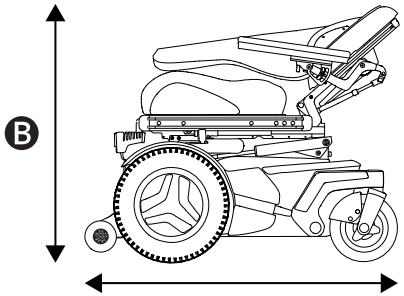

Product name:	**F5 Corpus**
Wheelchair class:	**B**

Ⓐ Height, width, and length

Height: 1090–1170 mm (43"–46")

Width: 650–790 mm (25.5"–31")

Length: 1165 mm (46")

Ⓑ Smallest transportation size

Height: 875 mm (34.5")

Width: 650–790 mm (25.5"–31")

Length: 955 mm (38")

Weight specification

Wheelchair with batteries: 189 kg (417 lb.)

Maximum user weight: 150 kg (330 lb.)

2.2 Tool bag

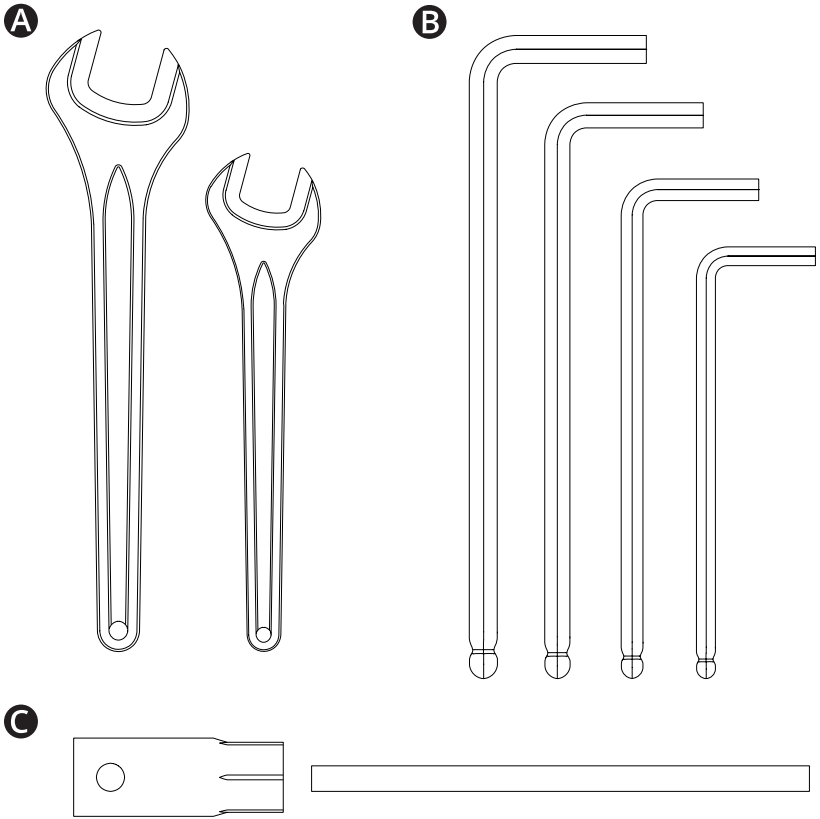

The wheelchair comes with a tool bag for maintenance and adjustments. It contains the following tools:

Ⓐ Spanner

general maintenance

11 mm

13 mm

Ⓑ Allen keys

general maintenance and seat adjustment

2–6 mm

Ⓒ Socket spanner

general maintenance

15 mm

Valve adapter

Inflating the castor wheel tyres

2.3 General control panel

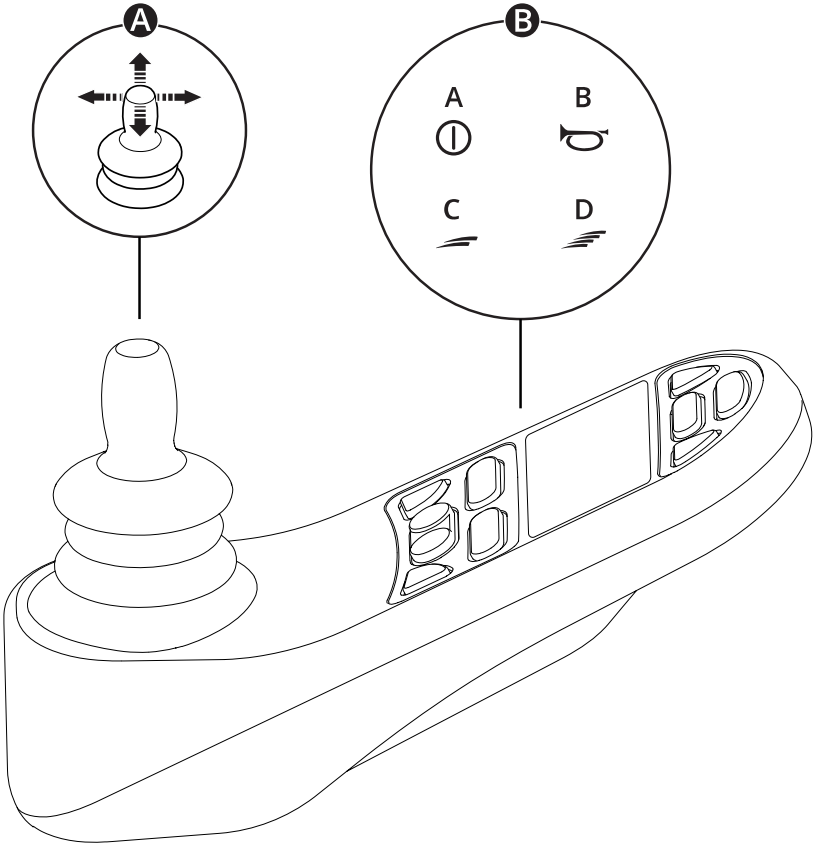

Ⓐ Joystick

Ⓑ Example of button functions

A. On/off

B. Horn

C. Decrease maximum speed

D. Increase maximum speed

For more information, see the user manual of your control panel:

https://documentation.permobil.com/manuals/control_panels/

2.4 Omni2

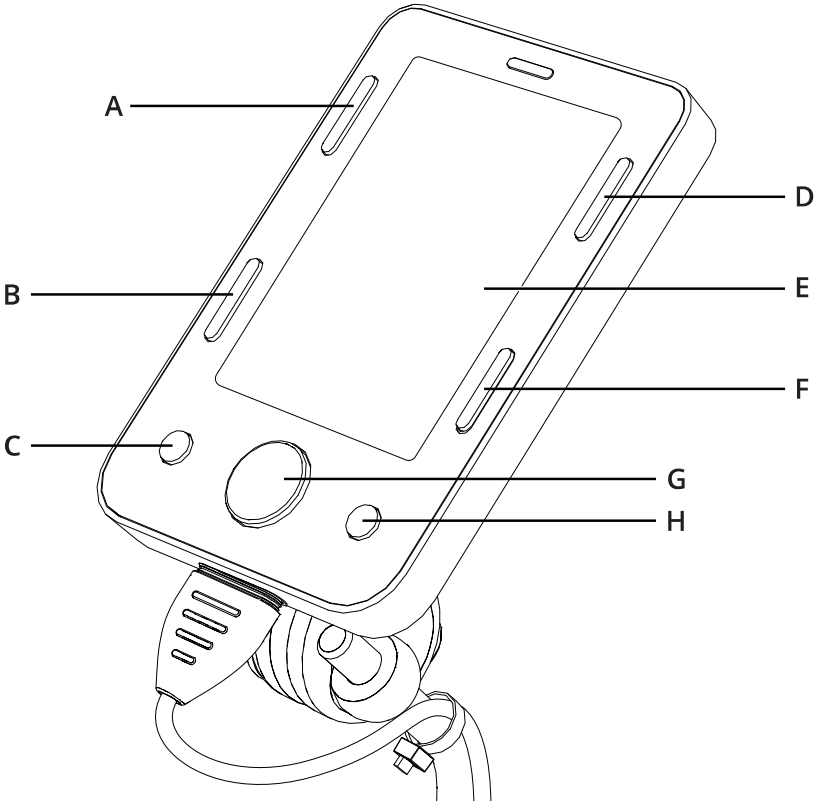

Your wheelchair can be equipped with an Omni2. An Omni2 is a device that makes it possible to operate the wheelchair with something other than a standard joystick.

Button configuration for Omni2.

A. On/off
B. Profile
C. Minus (−)
D. Settings
E. LCD screen
F. Mode
G. Navigation
H. Plus (+)

For more information, see the user manual of your Omni2 on the website of Curtiss-Wright:

http://support.pgdt.com/omni2-manual.pdf

2.5 Connected wheelchair

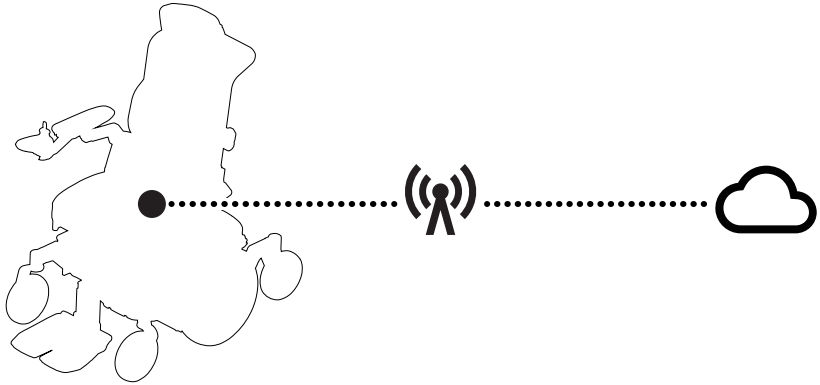

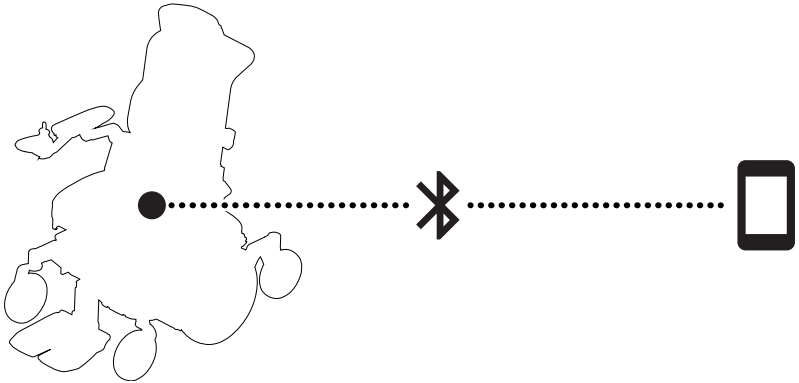

ConnectMe contains a radio transmitter. In certain areas, radio transmission is not allowed and ConnectMe must be set to flight mode ✈.

For more information, see the user manual of your control panel:

https://documentation.permobil.com/manuals/control_panels/

2.6 Lights and reflectors

A

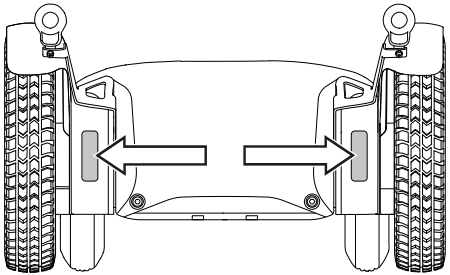

B

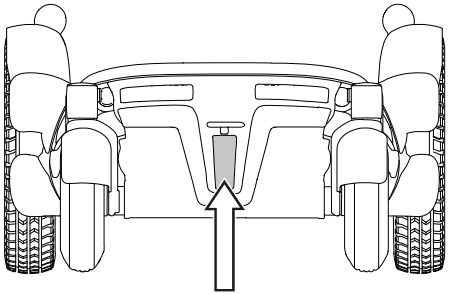

C

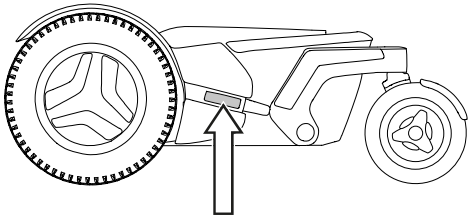

The wheelchair is equipped with reflectors at the front, the rear, and the sides.

Front lights, rear lights, and indicators are optional.

A Front reflectors

B Rear reflectors

C Side reflectors

2.7 Wheels

Ⓐ

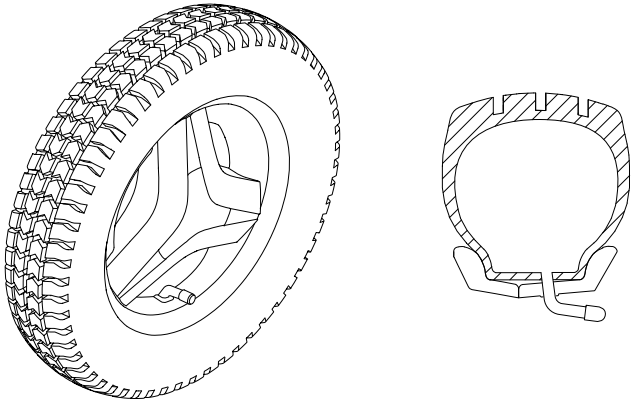

Ⓑ

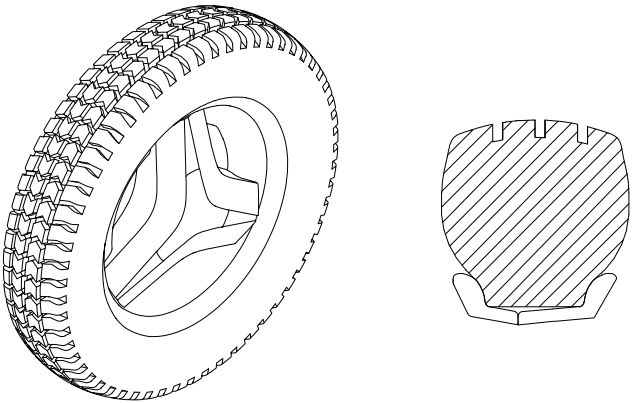

The wheelchair drive wheels have pneumatic tyres or flat-free (foam filled) tyres. The castor wheels have pneumatic tyres or solid polyurethane tyres.

Ⓐ Pneumatic tyres

Ⓑ Flat-free (foam filled) tyres

📖 Inflating the pneumatic tyres. See page 64.

2.8 Tie-down points

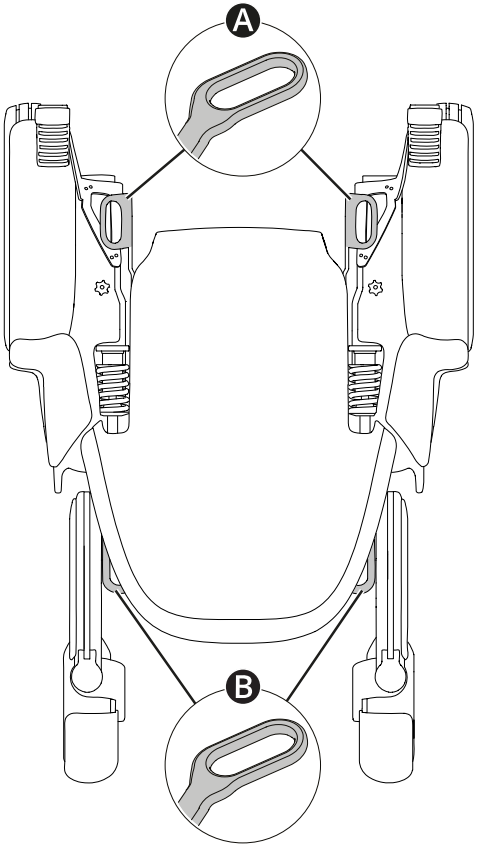

The wheelchair is equipped with four tie-down points used for transportation 🚗✈🚌. Two in the front Ⓐ and two in the rear Ⓑ.

📖 Vehicle transportation. See page 33.

2.9 Serial number label

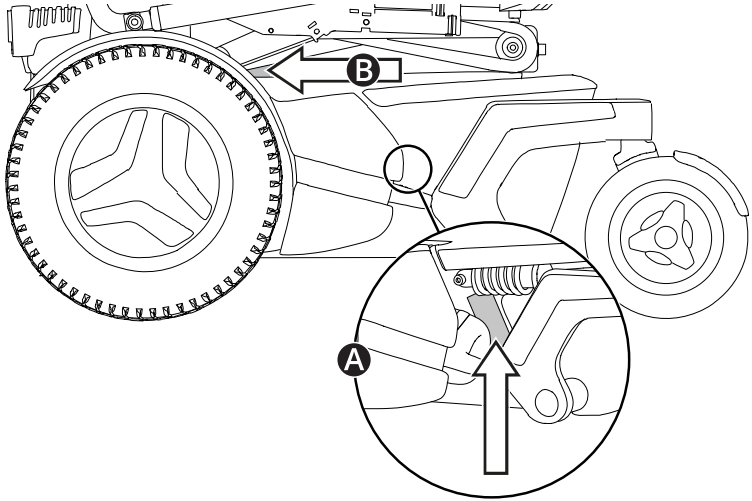

The serial number label is located on the lower, left-hand side of the wheelchair chassis. An additional serial number label is located on the seat lift. You may need to lift the seat for better visibility.

The contents of the serial number label are described on page 22.

2.10 Accessories

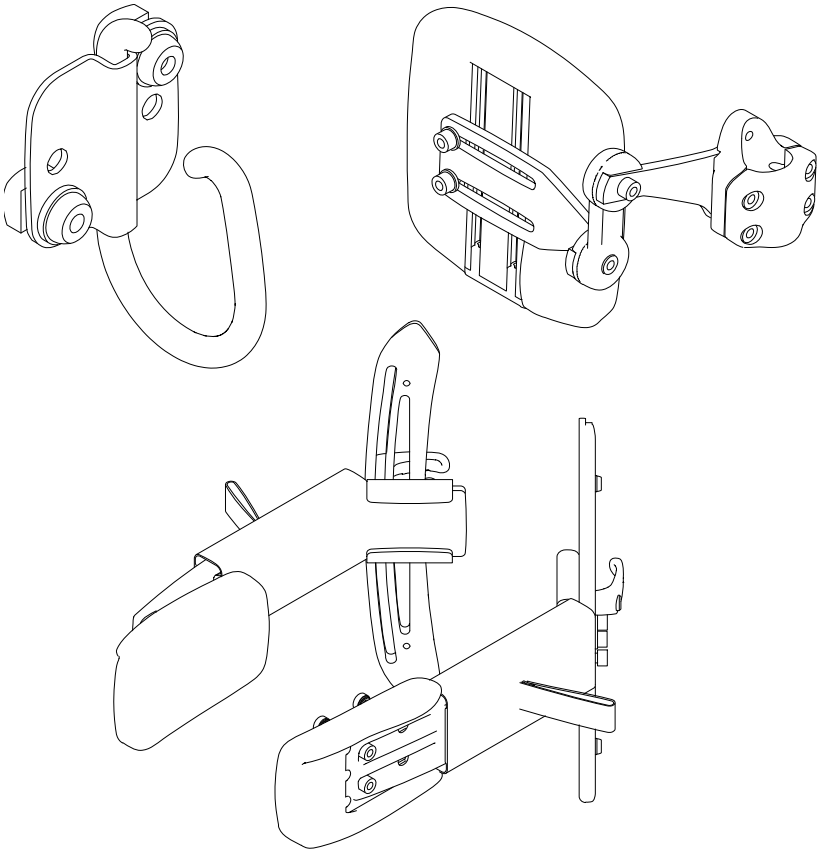

Accessories for Permobil products are subject to continuous development. Contact your nearest Permobil dealer for more information on the accessories available for your product. Only use accessories that are authorised by Permobil.

2.11 Spare parts

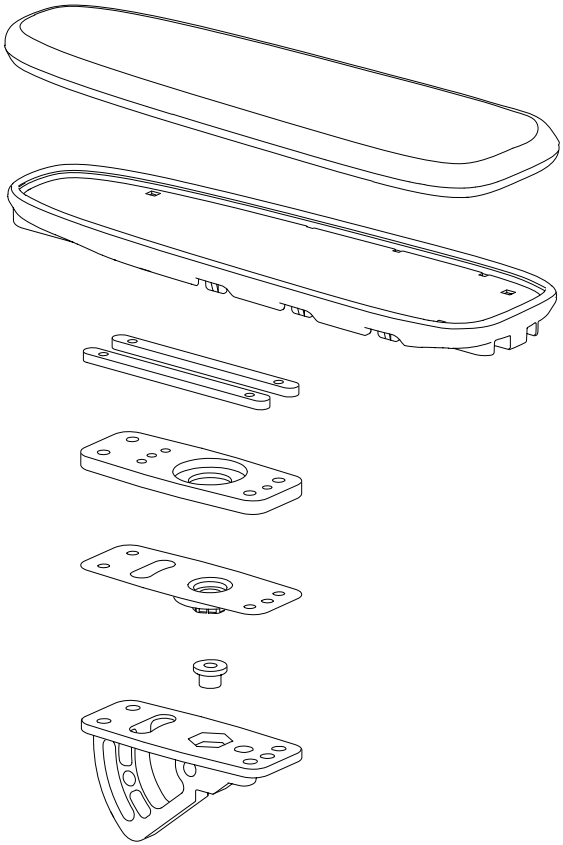

Spare parts must be ordered through Permobil.

Only use spare parts that are authorised by Permobil.

2.12 User manual

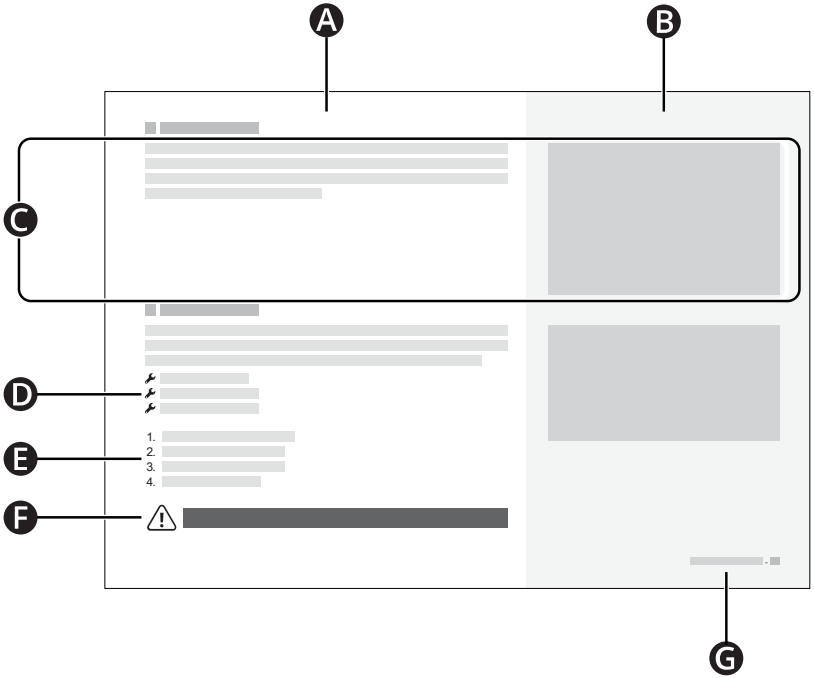

- Ⓐ Main text area
- Ⓑ Main illustration area
- Ⓒ Text correlates to the illustration to the right
- Ⓓ Tool list
- Ⓔ Instruction steps
- Ⓕ Warning sign
- Ⓖ Chapter and page number

3 Safety

Your wheelchair is a complex medical device and must be used safely. This chapter contains important information about how to safely use your wheelchair.

Permobil is not responsible for personal injuries or property damage resulting from any person's failure to follow the warnings and instructions in this manual or from failure to exercise good judgement.

The following warnings are referenced throughout this user manual. Any time you see the exclamation mark symbol, refer back to this chapter to review the appropriate warning.

3.1 Types of warning signs

The following types of warning signs are used in this manual:

WARNING!

Indicates a hazardous situation which, if not avoided, could result in serious injury or death as well as damage to the product or other property.

CAUTION!

Indicates a hazardous situation which, if not avoided, could result in damage to the product or other property.

IMPORTANT!

Indicates important information.

3.2 Warning signs

WARNING! Do not overload the wheelchair

Do not use the wheelchair to pull any kind of object and never hang excessive weights on the wheelchair. If you do, the wheelchair may become less stable and injure you.

WARNING! Remain aware of your wheelchair's dimensions

Always remain aware of your wheelchair's dimensions. Some emergency exits or routes can be too small for your wheelchair to navigate through them.

IMPORTANT! Do not drive on public roads

Do not drive the wheelchair on public streets or roads. Your wheelchair is not a car. Obey all local pedestrian rules and always drive your wheelchair defensively.

IMPORTANT! Do not modify the wheelchair

Do not modify your wheelchair or any of its components. Your wheelchair has been configured specifically for your needs as prescribed by your healthcare provider. Special skills, training, and knowledge are needed to set up, modify, and repair the wheelchair.

WARNING! Avoid steep slopes

Do not drive the wheelchair on slopes steeper than 10°. If you do, the wheelchair may become less stable and injure you. For maximum performance and stability, use caution on slopes steeper than 6°.

WARNING! Use freewheel mode cautiously

Freewheel mode should only be used on level ground and when an attendant is present to control the wheelchair. If you use freewheel mode on an incline or without an attendant, you may get injured or cause property damage.

IMPORTANT! Replace damaged charging components

If either the charger plug or charger socket becomes damaged, both must be replaced by qualified personnel. Excessive heat in either the charger plug or socket indicates damage.

WARNING! Do not exceed the maximum user weight

Do not drive the wheelchair if you exceed the maximum user weight. If you do, the wheelchair can harm you or break.

WARNING! Drive extra carefully when lifted or tilted

If the seat or backrest is lifted or tilted on flat ground, drive at a low speed. If the seat or backrest is lifted or tilted, do not drive the wheelchair on slopes or over obstacles. If you do, the wheelchair may become less stable and injure you.

WARNING! Do not cross obstacles at an angle

Do not cross obstacles at an angle. If you do, the wheelchair may become less stable and injure you.

WARNING! Use positioning aids at all times

Use securely fastened positioning aids, including your positioning belt, at all times. If you do not, you can sustain bodily injuries.

IMPORTANT! Positioning aids do not replace seatbelts

Wheelchair positioning aids do not replace vehicle mounted seatbelts. In a traffic accident, they do not provide the same protection as vehicle mounted seatbelts.

WARNING! Do not remove the support wheels

Do not remove the support wheels. If you do, the wheelchair is more likely to tip forward, which may cause injury.

WARNING! Vehicle seating requirements

When you use the wheelchair as a seat in a vehicle, it must be forward-facing and you must use a three-point belt restraint, including a shoulder and pelvic belt, to reduce the risk of head and chest impacts with vehicle components. The wheelchair is only designed and tested for use in this configuration. If the wheelchair is used in another vehicle seating configuration, you may be injured or your wheelchair may be damaged.

IMPORTANT! Do not use a damaged wheelchair

If the wheelchair or its accessories have suffered transportation damage, damage during driving, or damage from other causes, you must inform Permobil as soon as possible and immediately stop using your wheelchair. There is a risk that the wheelchair or its accessories can no longer be used safely. Contact your service provider or Permobil for further information.

WARNING! Keep the electronics dry

Make sure that the electronics are not exposed to moisture. If any of the shrouds or the joystick boot have cracks or tears, replace them immediately. Exposure to moisture can cause the wheelchair to short-circuit or catch fire, which may lead to personal injury or property damage.

WARNING! Do not get pinched

The wheelchair is heavy and contains many moving parts, which means that you may be pinched if you use the wheelchair incorrectly. When you see this warning, be mindful of your body location to avoid being pinched. Do not put any part of your body between moving parts.

WARNING! Use the leg rest tilt cautiously

Do not use the leg rest tilt when a knee support is in place. If you do, it may lead to bodily injury.

IMPORTANT! Armrest falling backwards

Some combinations of armrest height and armrest angle may cause the armrest to fall backwards when the backrest is tilted or reclined.

IMPORTANT! Recycle all batteries

Used batteries must be disposed of responsibly in accordance with local recycling regulations.

WARNING! Use the recommended tyre pressure

Use the recommended tyre pressure. If you overfill the tyres, they may explode and cause bodily injury.

IMPORTANT! Electromagnetic fields

The electronics in a power wheelchair can be affected by external electromagnetic fields (for example mobile phones). Similarly, the electronics in the wheelchair itself also emit electromagnetic fields that can affect the immediate surroundings (for example certain alarm systems in businesses).

IMPORTANT! Discontinue use after extraordinary events

Do not use your wheelchair if it has been dropped, crushed, exposed to fire, submerged in water, or involved in a vehicle accident, or other extraordinary events. Events like these may lead to significant damage that is impossible to detect upon inspection. Contact your service provider or Permobil. Damage caused by these types of incidents exceeds the limits covered by the manufacturer's guarantee.

WARNING! Adjust the backrest without weight

Do not place any weight on the backrest while you adjust it. If you do, the wheelchair may harm you or break.

WARNING! Adjust the leg rest without weight

Do not place any weight on the leg rest while you adjust it. If you do, you may get pinched.

WARNING! Sufficient ground clearance

Always position the leg rest and footplate high enough so that they will not hit the ground when you drive your wheelchair. This includes when you drive over changing slopes or over obstacles. If you allow the leg rest or footplate to hit the ground, the wheelchair may become less stable and injure you.

3.3 Labels

Your wheelchair has labels that contain important information about safety and proper use. These labels are described in greater detail in this subchapter. Do not remove labels from the wheelchair. If a label becomes difficult to read or falls off, order a replacement from Permobil.

Serial number label

A. SN Serial number of the wheelchair

B. Maximum user weight

C. Model: Model
Model version: Model version

D. Link to patents

E. Name and address of the manufacturer

F. YYYY-MM-DD: Date of manufacture

G. CE mark
MD Medical device

H. Unique Device Identification (UDI) as a GS1 DataMatrix including: date of manufacture and serial number

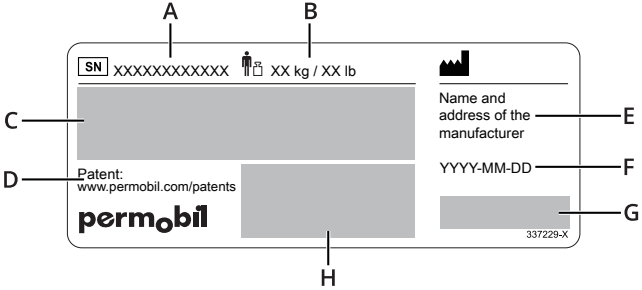

Warning

This label indicates that special attention is required.

Read the instructions

This label means that you must refer to your user manual.

Pinch risk

This label indicates a pinch risk. When you see this label, be extra careful to avoid pinching yourself or your belongings.

Main circuit breaker

This label shows the on and off positions for the main circuit breaker. Read more on page 39.

Freewheel mode

The image above the arrows indicates that the wheelchair is not in freewheel mode. The illustrations below the arrows indicate that the wheelchair is in freewheel mode. Read more about freewheel mode on page 33.

Tie-down points

This label shows the wheelchair's tie-down points. Read more about wheelchair transportation on page 33.

Support wheels

This label indicates that you must not remove your support wheels.

4 Wheelchair usage

This chapter aims to provide you with basic information to quickly get started with your wheelchair, and also provide you with information you may need in your everyday use of the wheelchair. The following subchapters describe how to drive the wheelchair, how to use the most common seat functions, how to charge the batteries, how to enter and exit freewheel mode, and some helpful information if you want to transport your wheelchair. They also describe the main circuit breaker, wheelchair storage, and manual adjustments.

4.1 Driving the wheelchair

You must always drive your wheelchair carefully and defensively. Your wheelchair is a complex medical device, not a car. Due to the individualised nature of Permobil products, your wheelchair is equipped with one of numerous different ways to drive it. The most common way is described below, but your wheelchair may not conform to this process depending on its individualisation.

To drive your wheelchair, you must first turn on the power. The power button or switch is most commonly located on the wheelchair's control panel, which is usually attached to the armrest. Most Permobil wheelchairs also include a joystick on the control panel. Use this joystick to turn the wheelchair and to drive forwards and backwards. Simply press the joystick in the direction you want to go Ⓐ. The further you press the joystick, the faster the wheelchair will move. Release the joystick to stop moving.

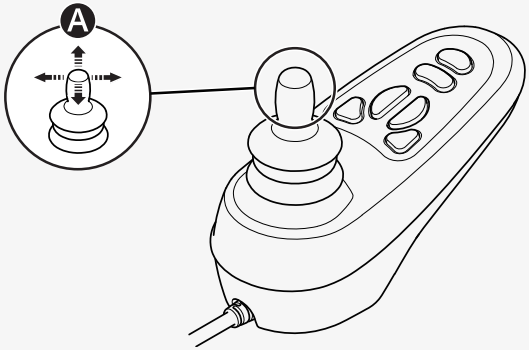

Drive as gently as possible and avoid sudden braking. Do not turn off the power to stop the wheelchair. If you turn off the power while driving, the wheelchair will stop abruptly.

Do not move the joystick before, during, or immediately after you turn on the control system. If you move the joystick during this time, it can generate a joystick error. If this happens, turn the wheelchair off and then on.

For additional information on how to control your wheelchair, refer to any other documentation received with your wheelchair or contact your Permobil dealer.

Turn off the power before you get in or out of the wheelchair or lift the armrest. Do not use the joystick, footplates, or armrests as support when you get in or out of the wheelchair.

The first time you drive your wheelchair must be in the presence of a person who is qualified to ensure that the wheelchair is properly fit for you.

Make sure that your feet are correctly and securely positioned on the footplates before you drive the wheelchair.

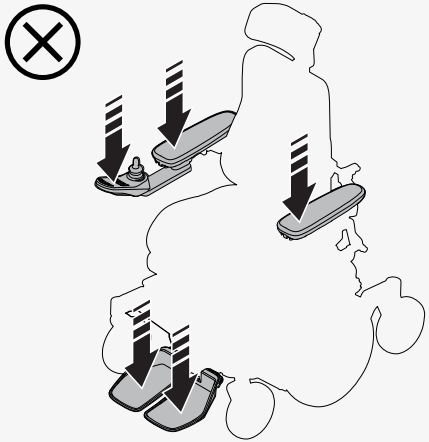

4.1.1 Driving restrictions

The wheelchair consumes a lot of power when you drive up a hill, over obstacles, or on rough terrain (such as sand). Permobil recommends that you, as far as possible, avoid driving for a long period of time in these types of conditions.

Permobil recommends that you do not use the wheelchair in extreme conditions, such as heavy rain, thick snow, or excessive heat or cold. Prolonged exposure to sunlight or cold temperatures may cause wheelchair surfaces to become very hot or cold. The driving range of your wheelchair is approximately 25 km (16 mi) when the battery temperature is 25°C (77°F). The driving range is affected by the battery temperature. Temperatures below 25°C (77°F) can shorten the driving range. Temperatures below −25°C (−13°F) can harm your batteries.

Do not

- operate the wheelchair under the influence of alcohol
- use the wheelchair on stairs or escalators
- use the wheelchair to carry passengers, regardless of their age or weight
- let children drive the wheelchair without supervision.

This user manual's wheelchair specification states the wheelchair's maximum user weight. The stated user weight includes the user and any personal effects.

If the wheelchair is not behaving as it should, or if you suspect that something is wrong, stop the wheelchair as soon as possible, turn off the power and contact your service provider or Permobil for further information.

Avoid sudden stops and starts. Use extreme caution in any of the following situations:

- when you are near edges or on elevated surfaces
- when driving on soft or uneven surfaces, such as grass, gravel, sand, ice, or snow
- when you drive from an area of high traction (such as a pavement) to an area of low traction (such as grass)
- when turning the wheelchair
- when in narrow or confined spaces
- when there are ridges that could cause the wheelchair to move in a different direction

When you drive over an obstacle, always directly face it. You can drive over obstacles up to 75 mm (3"). If you drive over higher obstacles, there is a greater risk of tipping and of damage to the wheelchair. If a car lock is installed on the wheelchair, it affects the ground clearance.

WARNING! Do not cross obstacles at an angle

When you drive downhill, additional precautions must be taken. Select the lowest maximum speed and proceed with caution. Driving down a slope can shift your centre of gravity forward. Release the joystick if the wheelchair is rolling faster than you would like. This makes the wheelchair stop, and you can descend again more slowly. Avoid sudden stops and starts. Note that the distance required to stop will increase when you drive downhill.

When driving uphill, drive straight up the slope, if possible.

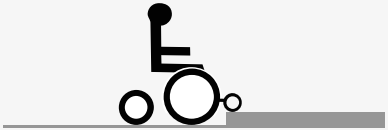

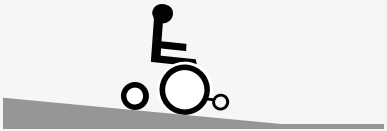

4.2 Support wheels

The wheelchair can be fitted with support wheels to reduce the risk of tipping. If your wheelchair is fitted with support wheels, they must remain installed.

The seat position affects the stability of the wheelchair even if the wheelchair has support wheels.

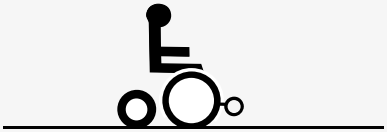

4.3 Seat functions

Your wheelchair may have seat functions. A seat function is a powered adjustment.

Due to the custom nature of Permobil products, your wheelchair is equipped with one of numerous different ways to adjust its seat functions. For additional information on how to control your wheelchair, refer to any other documentation received with your wheelchair or contact your Permobil dealer.

Permobil offers the following seat functions. Available functions may vary depending on the equipment fitted on your wheelchair.

- seat lift
- seat tilt
- forward tilt
- backrest tilt
- leg rest tilt
- footplate lift

The wheelchair's centre of gravity changes when you change the position of the seat and/or the backrest. When you lift or tilt the seat or backrest, you decrease the wheelchair's stability.

WARNING! Drive extra carefully when lifted or tilted

4.3.1 Seat lift

The seat lift lifts and lowers the seat. When the seat is lifted, the maximum speed of the wheelchair can be reduced automatically or the ability to drive the wheelchair can be restricted completely. The reduced maximum speed can be indicated with a turtle on the display of the control panel, and the drive restriction can be indicated with a red light.

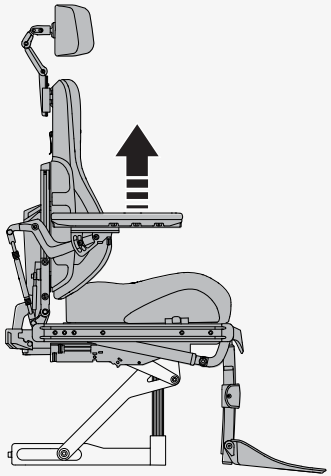

4.3.2 Seat tilt

The seat tilt tilts the entire seat, from headrest to leg rest. When the seat is tilted, the maximum speed of the wheelchair can be reduced automatically or the ability to drive the wheelchair can be restricted completely. The reduced maximum speed can be indicated with a turtle on the display of the control panel and by a yellow light on the switch box. The drive restriction can be indicated with a red light on the switch box or by a flashing turtle on the display of the control panel.

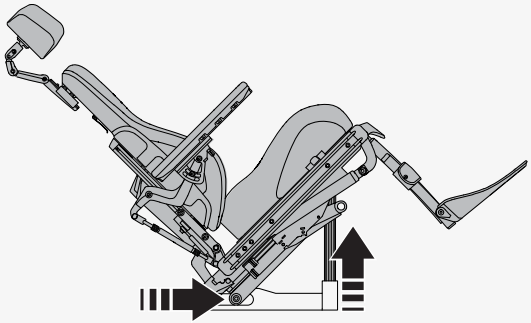

4.3.3 Forward tilt

The forward tilt has programmable positions to meet individual needs.

Typical tilt positions are 5°, 10°, 20°, and 45°.

- 10° makes it easier to reach objects, for instance on a table.
- 20° extends your reach even further.
- 45° lowers the footplates.

When you tilt the seat forward or backward, it will stop when it reaches a preprogrammed position or a neutral, not tilted, position. In order to continue the movement forwards or backwards from a position, press the button or repeat the joystick manoeuvre again. The tilt angle may vary depending on how the forward tilt is programmed and if any positioning limitations apply.

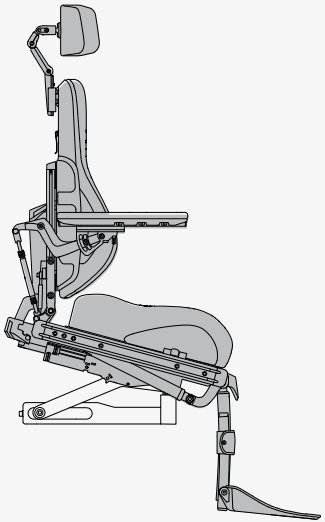

WARNING! Use positioning aids at all times

4.3.4 Backrest tilt

The backrest tilt tilts the backrest backwards and back up again. When the backrest is tilted, the maximum speed of the wheelchair may be reduced automatically or the ability to drive the wheelchair may be restricted completely. The reduced maximum speed may be indicated with a turtle on the display of the control panel and by a yellow light on the switch box. The drive restriction may be indicated with a red light on the switch box or by a flashing turtle on the display of the control panel.

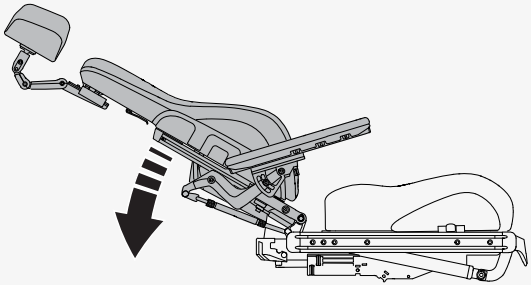

4.3.5 Leg rest tilt

The leg rest tilt tilts the leg rest. When the leg rest is tilted, the maximum speed of the wheelchair may be reduced automatically or the ability to drive the wheelchair may be restricted completely. The reduced maximum speed may be indicated with a turtle on the display of the control panel and by a yellow light on the switch box. The drive restriction may be indicated with a red light on the switch box or by a flashing turtle on the display of the control panel.

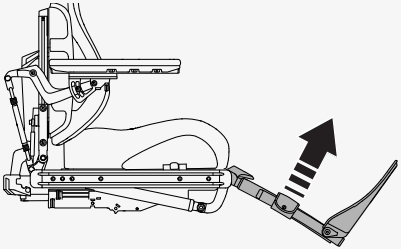

WARNING! Use the leg rest tilt cautiously

4.3.6 Footplate lift

The footplate lift shortens or lengthens the leg rests to adjust the height of the footplates. You can use this function to adjust the pressure on the back of your thighs.

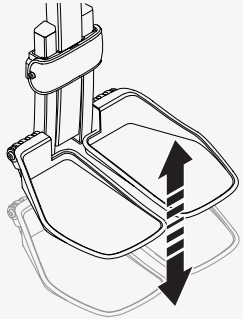

4.4 Charging the batteries

You can charge your wheelchair from the control panel. The charging socket is located at the front of the joystick. Always connect the charger to the wheelchair first before you connect the charger to the wall.

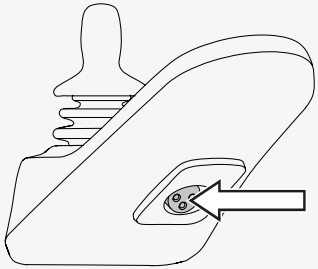

Charge the wheelchair as often as possible. Do not use the wheelchair if the battery charge is low; otherwise you could become stranded. If the batteries become completely discharged, charge them immediately.

Charge the batteries in a well-ventilated, dry room. Never expose your batteries or any part of your wheelchair to an open flame. Only use a Permobil charger intended for use with your wheelchair. It is not possible to drive the wheelchair while it charges.

See the battery charger's manual for instructions and further information.

4.5 Freewheel mode

The wheelchair is fitted with two freewheel levers. When the freewheel levers are released, the wheelchair's brakes are disengaged from the motor. When in freewheel mode, the wheelchair can be moved manually, but cannot be controlled electronically.

When the wheelchair is in freewheel mode, it must not be possible to drive the wheelchair. If it can be driven, contact your service technician.

WARNING! Use freewheel mode cautiously

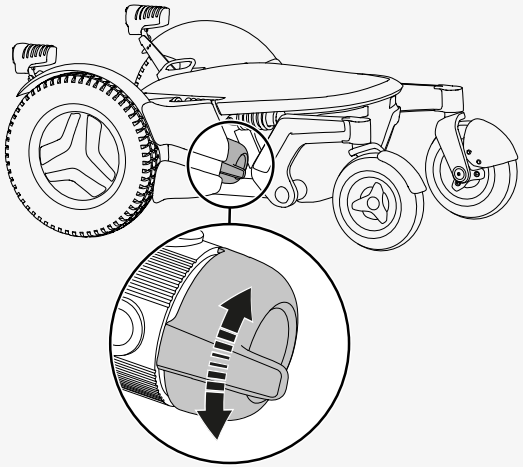

4.5.1 Entering freewheel mode

1. Make sure that the wheelchair is on level ground.
2. Turn off the wheelchair.
3. Flip the freewheel levers downward.

4.5.2 Exiting freewheel mode

1. Turn off the wheelchair.
2. Flip the freewheel levers upward.

4.6 Vehicle transportation

This chapter describes how you transport your wheelchair in a vehicle. The wheelchair must only be transported in vehicles approved for this purpose.

4.6.1 Securing the wheelchair in a vehicle

This chapter describes how you secure the wheelchair in a vehicle. You must either secure the wheelchair at its tie-down points or use a docking system that complies with ISO 10542–1:2012, which is an international standard that governs wheelchair tie-downs and occupant-restraint systems.

Remove all non-crash-tested accessories and other loose objects from your wheelchair and store them safely before you transport your wheelchair in a motor vehicle. If you transport a wheelchair in a motor vehicle when the wheelchair has non-crash-tested accessories attached or contains loose objects, the vehicle's occupants could suffer bodily injury.

This is how you secure the wheelchair at its four tie-down points. Make sure that the wheelchair is properly secured and that the wheelchair is not in freewheel mode. Secure the wheelchair with straps Ⓐ at the tie-down points at the front and rear. The tie-down points are marked with yellow labels Ⓑ.

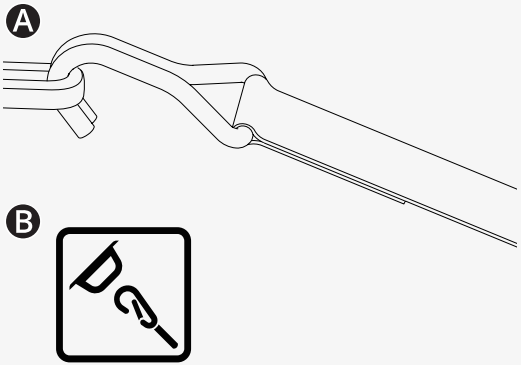

After you have secured the straps to your wheelchair, secure the other end of the straps to your vehicle according to the appropriate instructions. The end-fitting on the strap must comply with ISO 10542–1:2012, which is an international standard that governs wheelchair tie-downs and occupant-restraint systems. Every vehicle tie-down system is different, and it is important that you follow the instructions for your particular vehicle system.

To make transportation of the wheelchair easier, you can remove or fold down the backrest. This is done in a few simple moves. See page 45. If necessary, you can also remove the headrest. See page 40.

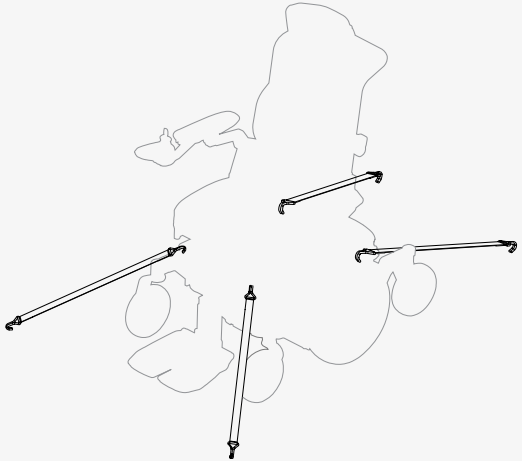

You can also use a docking system to secure your wheelchair. The Dahl docking station is an approved docking system. See the Dahl docking station's manual on how to operate it.

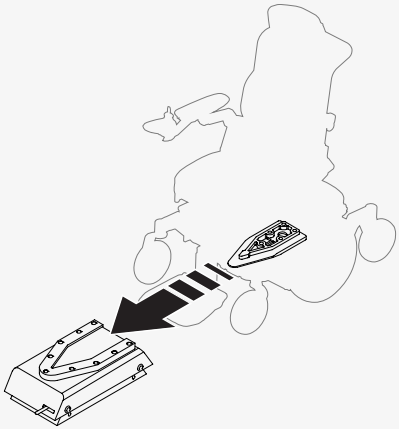

4.6.2 Using the wheelchair as a seat in a vehicle

Permobil recommends that you transfer to a vehicle seat and that you use the vehicle's restraint systems. The unoccupied wheelchair should be stored in a cargo area or secured in the vehicle during travel. Follow the instructions below if you want to use the wheelchair as a seat in a vehicle.

IMPORTANT! Positioning aids do not replace seatbelts

WARNING! Vehicle seating requirements

You must use both pelvic-belt restraints and shoulder-belt restraints. Make sure that the belt restraints are as tight as possible, without becoming uncomfortable, and that they are not twisted. They must be close to your body and not held away by parts of the wheelchair. Adjust your restraint system such that the release mechanisms cannot be pressed during a crash.

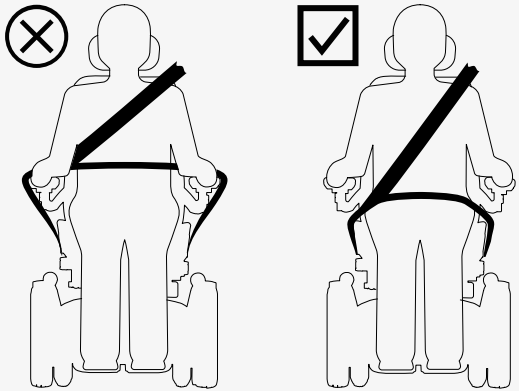

The shoulder-belt restraint should be worn over the shoulder. The pelvic-belt restraint should be worn low across the pelvis and within the preferred zone of 30° to 75°. It is desirable to have a steeper angle within the preferred zone. Make sure that the wheelchair is not lifted or tilted. The wheelchair must be in the position shown in the illustration.

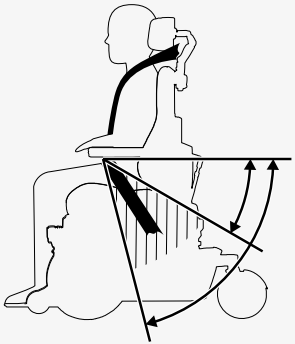

4.7 Air transportation

This chapter contains information that may be helpful if you are transporting your wheelchair by air.

4.7.1 Batteries

The main circuit breaker must always be in the off position. In most cases, gel batteries do not have to be removed from the wheelchair.

4.7.2 Weight and dimensions

Contact the relevant airline for applicable rules on weight and dimensions for your power wheelchair.

4.7.3 Preventing damage to wheelchair

Since the wheelchair will be put with other goods in a confined space during the flight, it is important to take preventive measures to minimise transportation damage to the wheelchair.

Cover the control panel and other sensitive objects with soft, shock-absorbing material (foam plastic or similar). Push the control panel toward the backrest. Tape any loose cables to the seat or hoods.

4.8 Rail transportation

Regulation (EU) 1300/2014 concerns the interoperability of the European rail network. A part of this regulation contains limits for weights and dimensions. Your wheelchair may deviate from the weight limits and from the dimension limits specified.

4.9 Main circuit breaker

Your wheelchair has a main circuit breaker with two functions. You can use it to turn off the main power, for example before you transport the wheelchair. It also trips if there are any issues with the circuits.

The first time the main circuit breaker trips, you can reset it yourself. If it trips again, contact your service technician.

Use the lever at the back of the wheelchair to turn on and off or to reset the main circuit breaker. Always turn off the control panel before you turn off the main circuit breaker.

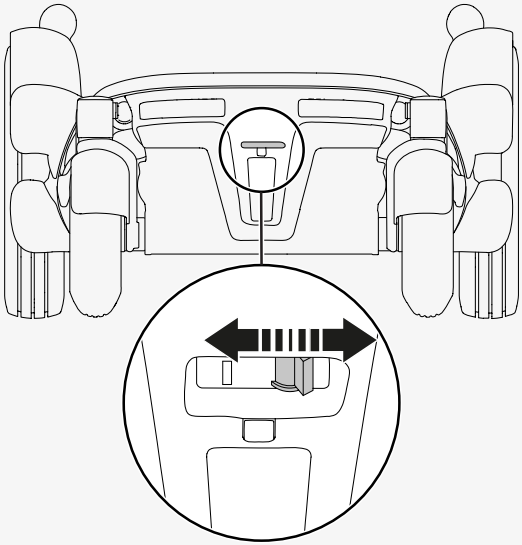

4.10 Wheelchair storage

You can store your wheelchair for a short or long period of time.

When you store it for a short time, make sure that the room is dry and not colder than 5°C (41°F). If the temperature is lower, the batteries might not charge fully. They are also more vulnerable to corrosion.

When you store it for a long time, fully charge the batteries before storage. Remember to switch off the main circuit breaker. Charge the batteries every month. You will need to switch on the main circuit breaker to charge the batteries, then switch off the main circuit breaker if the wheelchair is to remain in storage.

4.11 Manual adjustments

The wheelchair may have functions that are adjusted manually. Available functions vary depending on the equipment fitted on your wheelchair.

If you do not have the powered lift function on your wheelchair, seat height must only be adjusted by authorised service providers.

4.11.1 Headrest

This chapter shows you how to adjust the height, depth, and angle of the headrest. It also shows you how to remove and install the headrest. Do not put any weight on the headrest while you adjust it. If you do, you may damage it.

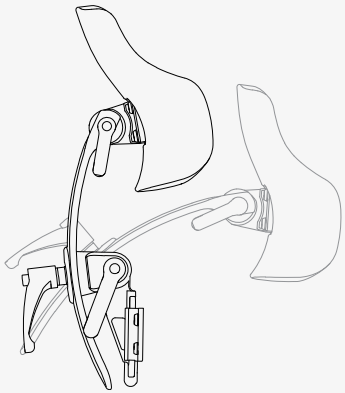

This is how you adjust the height and depth of the headrest.

1. Loosen the handle Ⓐ on the backrest.
2. Adjust the height or depth to the preferred position.
3. Tighten the handle Ⓐ.

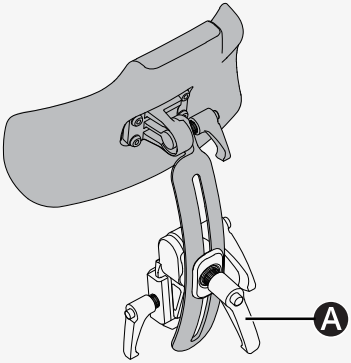

This is how you adjust the angle of the headrest.

1. Loosen the handle Ⓑ on the rear of the headrest.
2. Adjust the headrest angle to the preferred position.
3. Tighten the handle Ⓑ.

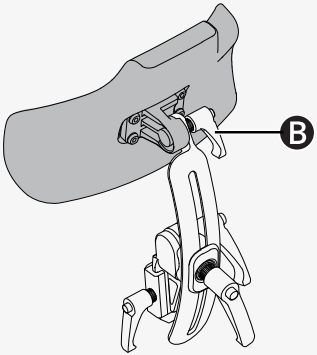

This is how you remove and install the headrest.

1. Loosen the handle Ⓒ on the backrest.
2. Lift the headrest straight up.

Install the headrest in the reverse order. You can remove and install the headrest without affecting current settings.

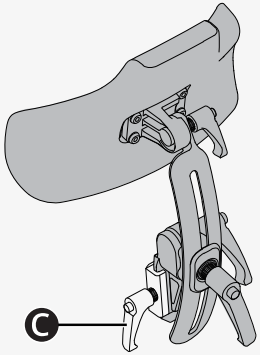

4.11.2 Headrest with link hardware

This chapter shows you how to adjust the height, depth, and angle of the headrest. It also shows you how to remove and install the headrest.

This is how you adjust the height of the headrest. There are four different height settings on your headrest. Setting Ⓐ is the lowest and setting Ⓑ is the highest. If setting Ⓐ is used, test the seat functions seat tilt and backrest tilt for interference.

🔧 Allen key 2.5 mm

1. Follow the instructions below to remove the headrest.
2. Remove the screw and put it in the preferred setting on the bracket.
3. Follow the instructions below to install the headrest.

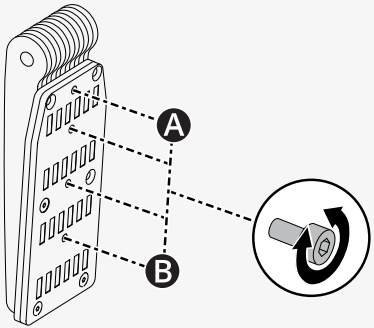

This is how you adjust the height and depth of the headrest.

🔧 Allen key 5 mm

1. Loosen the screw at each link Ⓐ.
2. Change the angle of the links as required.
3. Tighten the screws.

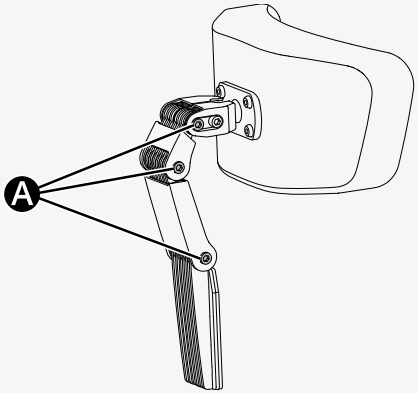

This is how you adjust the angle of the headrest.

🔧 Allen key 5 mm

1. Loosen front screw Ⓐ in the top link.
2. Adjust the headrest angle to the preferred position (Ⓑ).
3. Tighten the screws.

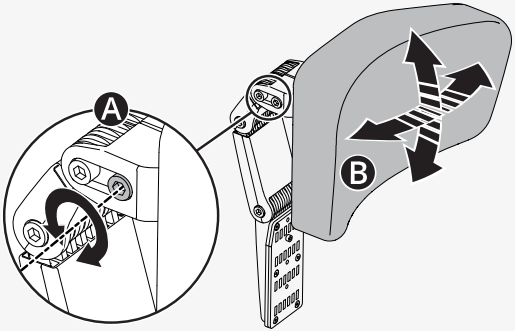

This is how you remove and install the headrest.

1. Loosen the handle Ⓐ at the rear of the backrest.
2. Lift the headrest straight up (Ⓑ).

Install in the reverse order. You can remove and install the headrest without affecting current settings.

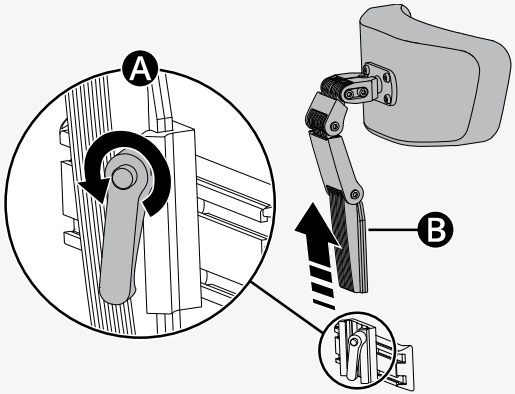

4.11.3 Backrest tilt

You can adjust the backrest to several fixed positions. From an upright position, the backrest can be tilted a maximum of 45°.

1. Pull out handle Ⓐ of the quick-acting lock so that the locking tube moves freely.
2. Adjust the backrest angle to the preferred position.
3. Release the handle Ⓐ to lock the locking tube.
4. Make sure that the backrest is locked in position.

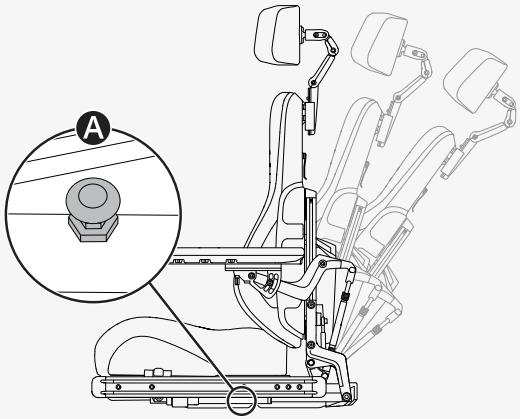

4.11.4 Removing the backrest

You can remove the backrest to make transportation of the wheelchair easier. First, remove backrest cushion Ⓐ. It is attached with Velcro. Then carefully undo the clip Ⓑ on the backrest and pull the upper part of the backrest straight up (Ⓒ).

If necessary, you can also remove the headrest. See 4.11.1 *Headrest*, page 40.

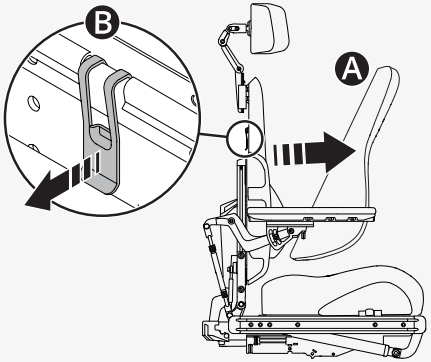

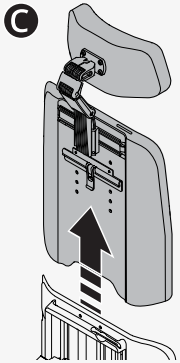

4.11.5 Armrest

This chapter shows you how to adjust a swivelling armrest and how to adjust armrest height and armrest angles.

4.11.5.1 Swivelling armrest

This chapter describes how you adjust a swivelling armrest. A swivelling armrest is an armrest that you can push in or out as preferred between certain settings. There are three swivel settings (Ⓑ, Ⓒ, and Ⓓ) and one locked setting (Ⓐ).

Swivel settings		
Ⓐ	Factory setting	Locked
Ⓑ	Factory setting	0° to +15°
Ⓒ	Custom setting	-15° to +15°
Ⓓ	Custom setting	0° to +30°

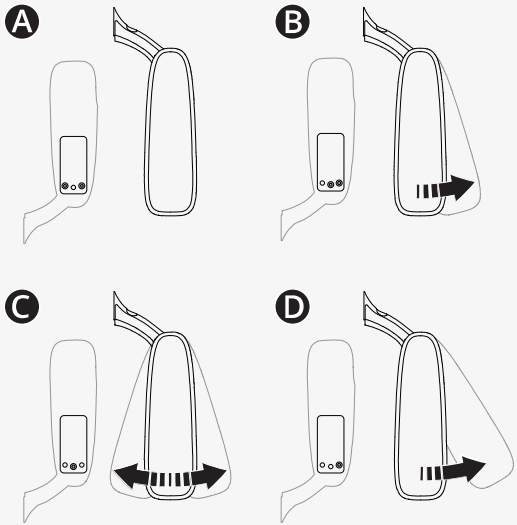

This is how you change the swivel setting.

🔧 Allen key 5 mm

1. Fold up the armrest.
2. Remove the screws from the current setting.
3. Insert and tighten the screws in the preferred setting.
4. Fold down the armrest.

4.11.5.2 Armrest height and armrest angles

This chapter shows you how to adjust the height of the armrest and the angles of the armrest. There are two ways to adjust the armrest angle.

This is how you adjust the height of the armrest. You can see the current height of the armrest on the backrest. The adjustment crank is located in the backrest.

- Allen key 5 mm
- Adjustment crank

1. Loosen the four screws Ⓐ on the backrest.

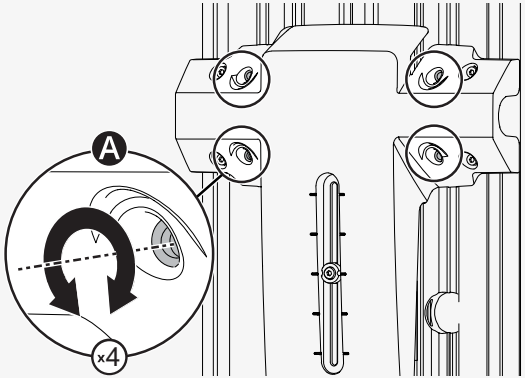

2. Remove adjustment crank Ⓑ.
3. Use the adjustment crank to turn the adjustment screw Ⓒ until the armrest is in the preferred position.
4. Tighten the four screws on the backrest.

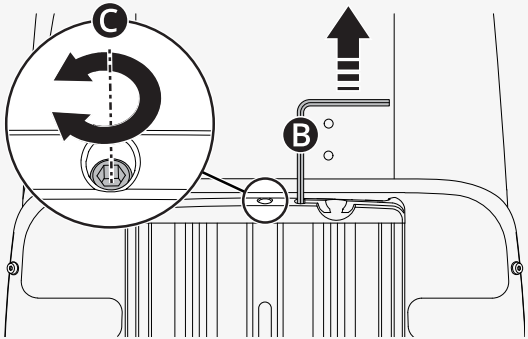

This is one way to adjust the angle of the armrest. The lower lock nut has a left-hand thread.

🔧 Spanner 14 mm

1. Loosen the two lock nuts Ⓐ on the adjustment bar Ⓑ.
2. Turn the adjustment bars to adjust the armrest angle to the preferred position.
3. Tighten the two lock nuts.

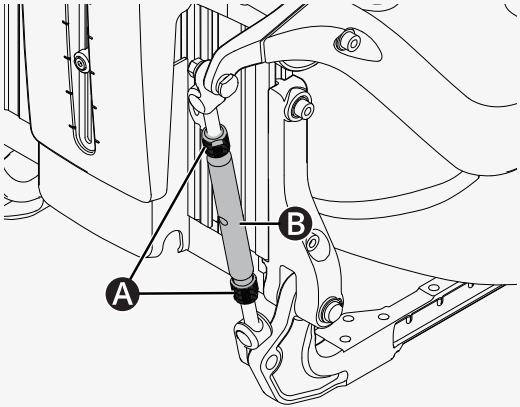

This is the other way to adjust the angle of the armrest.

🔧 Allen key 5 mm

1. Move the screw from fixed position Ⓐ to flexible position Ⓑ.
2. Adjust the armrest angle to the preferred position.
3. Tighten screw Ⓑ.

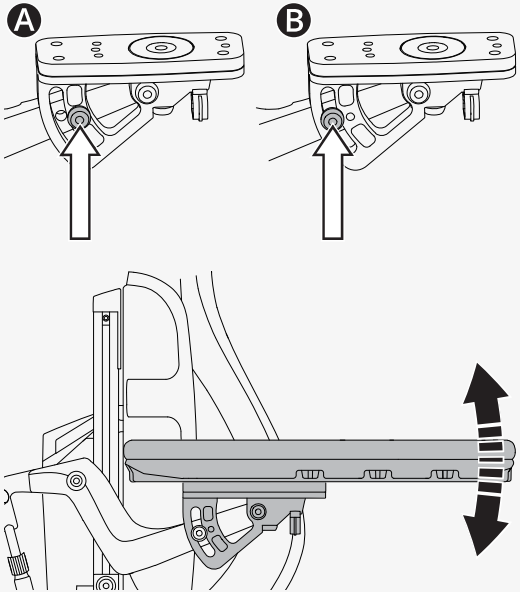

4.11.6 Leg rest tilt

The leg rest on your wheelchair can be adjusted to several positions from vertical to horizontal.

1. Pull out handle Ⓐ of the quick-acting lock so that the locking tube moves freely.
2. Adjust the leg rest angle to the preferred position.
3. Release the handle Ⓐ to lock the locking tube.
4. Make sure that the leg rest is locked in position.

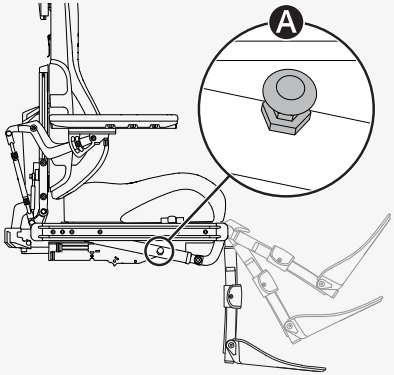

4.11.7 Footplates

This chapter shows you how to adjust the height and the angle of the footplates. There are two ways to adjust the height of the footplates. You need to remove the leg rest cover before you can make any height adjustment.

1. Remove the two screws.
2. Pull the leg rest cover forward.

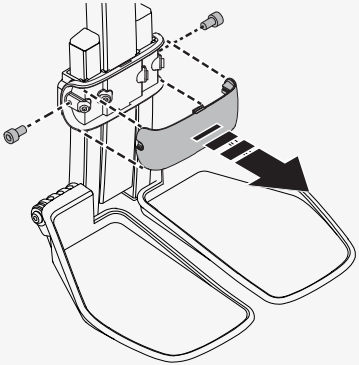

This is how you adjust the height of the footplates.

Ⓐ Adjusts both footplates to the same height

Ⓑ Adjusts the footplates separately, if you prefer them at different heights

1. Undo the locking screws.
2. Adjust the footplates to the preferred height.
3. Tighten the locking screws.
4. Make sure that the footplates are secured.
5. Push the leg support cover into place.
6. Tighten the two screws.

This is how you adjust the angle of the footplates. You can adjust the footplates separately if you prefer them at different angles.

🔧 Allen key 5 mm

🔧 Spanner 10 mm

1. Tilt up the footplate.
2. Loosen the lock nut Ⓐ.
3. Turn the stop screw Ⓑ up or down until the footplate angle is in the preferred position.
4. Tighten the lock nut Ⓐ.

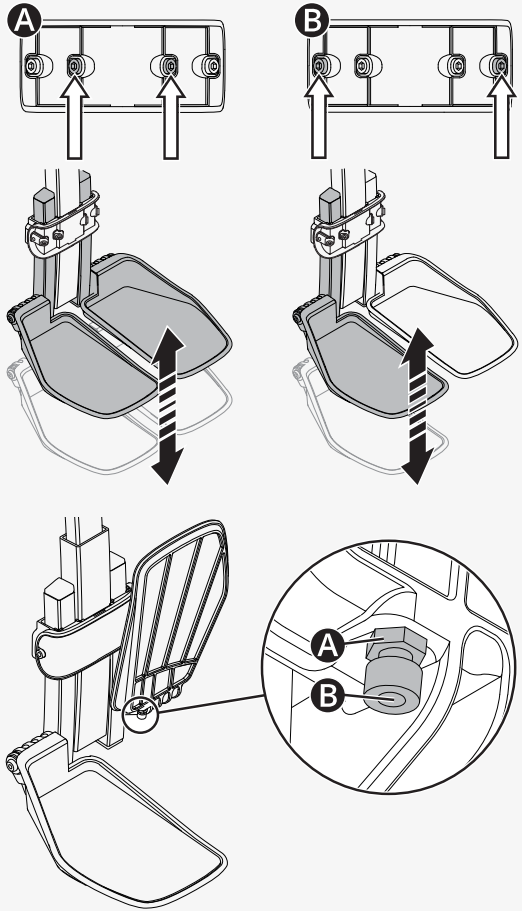

4.11.8 Lumbar support

This chapter shows you how to adjust the lumbar support. The lumbar support consists of three cushions with Velcro. If you want to adjust it, simply remove the backrest cushion and adjust the lumbar support as preferred.

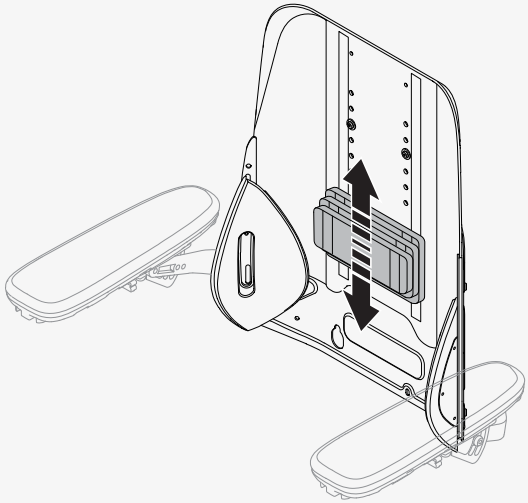

4.11.9 Trunk support

This chapter shows you how to adjust the height of the trunk support.

This is how you adjust the height of the trunk support.

🔧 Allen key 5 mm

1. Remove the backrest cushion.
2. Loosen the screw Ⓐ on the backrest that holds the trunk support in place.
3. Adjust the trunk support Ⓑ to the preferred position.
4. Tighten screw Ⓐ.
5. Put back the backrest cushion.

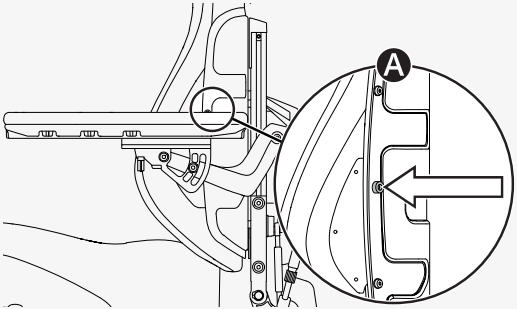

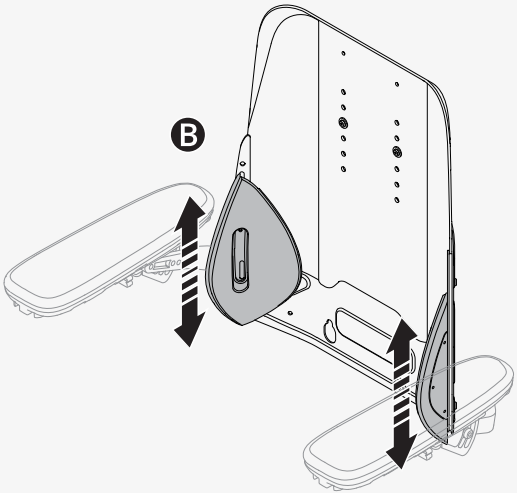

4.11.10 Knee support

This chapter shows you how to remove and attach the knee support. All adjustments of the knee support must be made by an authorised service technician.

You can remove the knee support from the leg rest to make it easier to get in and out of the wheelchair. The leg rest must be in its most vertical position (90° to the seat) before you can remove the knee support.

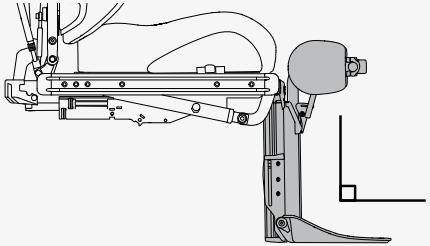

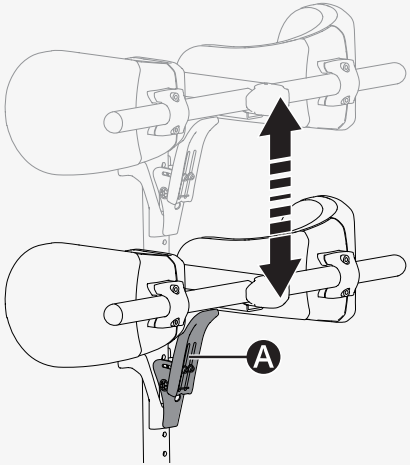

1. Make sure that the leg rest is locked in position.
2. Press and hold the latch A.
3. Lift the knee support straight up.

When you attach the knee support to your wheelchair, make sure that it is securely in position before you rely on it for support. If you do not properly secure the knee support, it may lead to bodily injury.

WARNING! Use the leg rest tilt cautiously

4.11.11 Rotational panel holder

You can adjust the distance between the armrest and the control panel, the resistance of the rotational panel holder, and the angle of the rotational panel holder.

This is how you adjust the distance between the armrest and the control panel.

🔧 Allen key 5 mm

1. Loosen screw Ⓐ on the panel joint.
2. Adjust the control panel to the preferred position.
3. Tighten the screw.

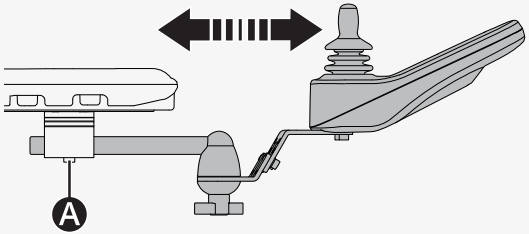

This is how you adjust the resistance of the rotational panel holder.

Loosen or tighten knob Ⓐ on the friction joint to adjust how easily the rotational panel holder can be pushed to either side.

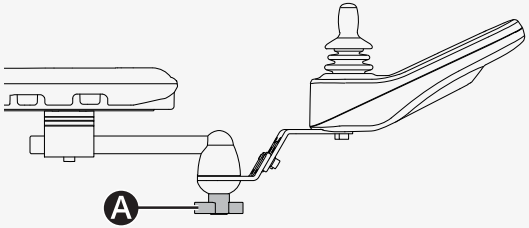

You can angle the rotational control panel to either side. This is how you adjust the angle.

🔧 Allen key 4 mm

1. Remove screw Ⓐ on the side you want to angle.
2. Loosen the other screw Ⓐ.
3. Adjust the angle of the panel Ⓑ to the preferred position.
4. Tighten the two screws.

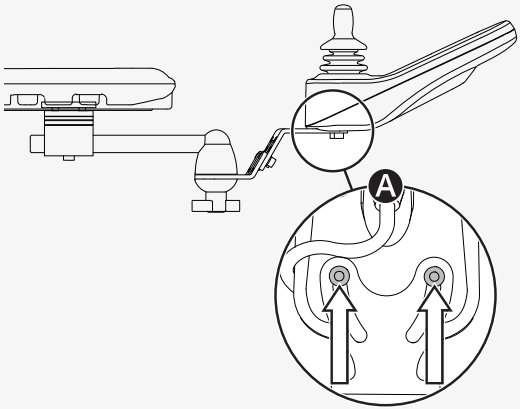

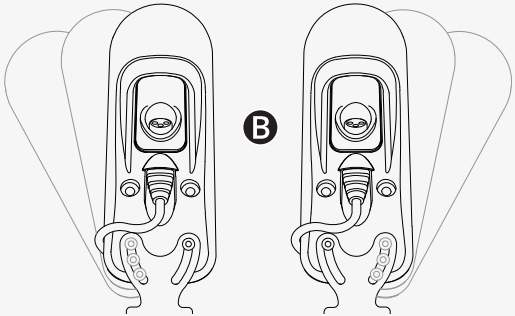

4.11.12 Parallel panel holder

You can adjust the distance between the armrest and the control panel. It is also possible to adjust the angle of the control panel.

This is how you adjust the distance between the armrest and the control panel. Leave a gap of at least 10 mm (0.4") between the armrest and the control panel.

- Torque wrench
- Allen key 5 mm

1. Loosen screws Ⓐ enough to slide the panel holder.

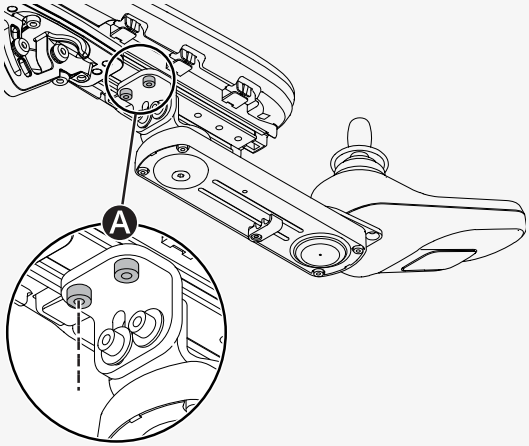

2. Adjust the panel to the preferred position.
3. Torque the screws to 9.8 N m (7.2 lb-ft).

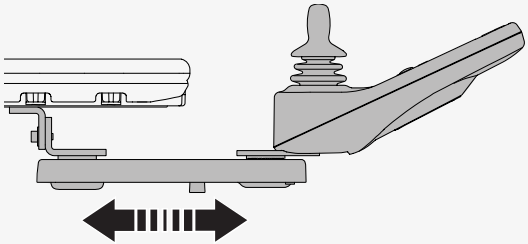

This is how you adjust the angle of the control panel.

🔧 Allen key 4 mm

Slide the panel to the preferred position. You can loosen or tighten screw Ⓐ to adjust the resistance.

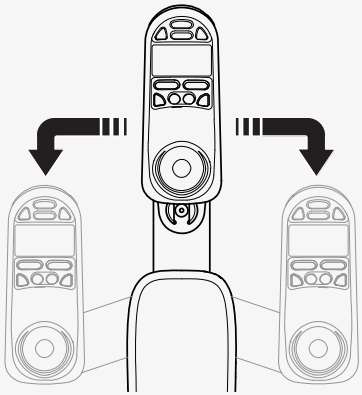

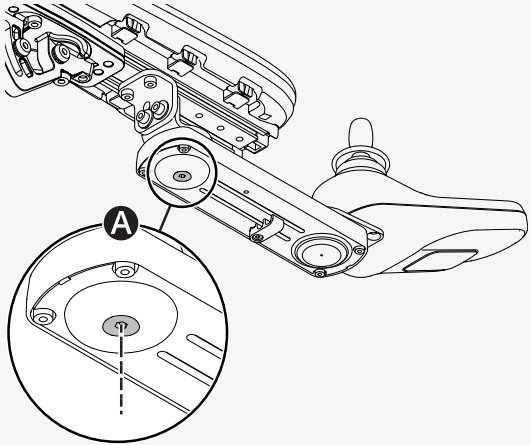

4.11.13 Positioning belt

Always wear your positioning belt. There is an accessory rail on each side of the seat frame, for example, for attaching a positioning belt.

Spanner 10 mm

1. Screw the positioning belt in place in the rail's upper groove.

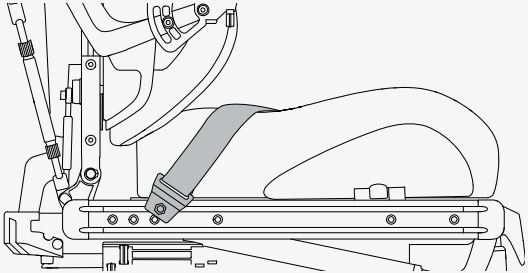

2. Make sure that the belt buckle locks properly in the snap lock.

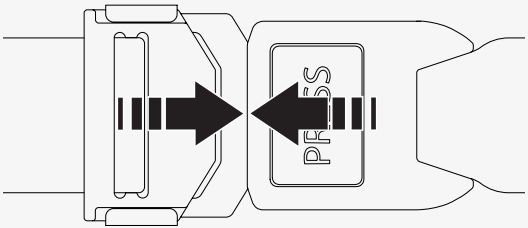

5 Maintenance

For the wheelchair to work well, it is important that you use it correctly and maintain it regularly. A well maintained wheelchair lasts longer and has a lower risk of defects. Only carry out maintenance and minor adjustments that are specified in the user manual. All other maintenance, service and repairs must be carried out by a qualified service technician authorised by Permobil.

5.1 Maintenance and inspection schedule

Permobil recommends compliance with the following maintenance and inspection schedule. Contact your authorised dealer for all service-related needs or questions.

Maintenance and inspection schedule	Daily	Weekly	Monthly	Yearly
Check battery level indicator and charge the wheelchair if necessary.	✕			
Make sure that the joystick panel and other control panels are not damaged.	✕			
Make sure that all removable parts are securely fastened.	✕			
Check positioning belts for wear and make sure buckles work.	✕			
If the wheelchair is equipped with pneumatic tyres, check the tyres and inflate as necessary.		✕		
If the wheelchair is equipped with lights and indicators, make sure that they are operational and clean.		✕		
Clean the wheelchair and upholstery.			✕	
Check upholstery, seating, and postural supports for wear.			✕	

Maintenance and inspection schedule	Daily	Weekly	Monthly	Yearly
Check that the freewheel mode and the freewheel lever work properly.			✕	
Complete inspection, safety check , and service performed by an authorised wheelchair dealer.				✕

5.2 Cleaning

Regular care and maintenance will prevent unnecessary wear and damage to your Permobil product. Turn off the power before you clean the wheelchair.

5.2.1 Metal surfaces

Due to the high quality powder coating, optimum corrosion protection is guaranteed. Ideally, use a soft cloth or sponge, hot water, and a mild detergent for normal cleaning. Wipe down carefully with a cloth and water, and dry off.

Remove scuff marks from semi-matt surfaces using soft wax. Follow the instructions provided by the manufacturer of the soft wax.

Remove scuff marks and scratches from shiny surfaces with car polish. You can use either liquid or paste car polish. After you have polished, apply soft car wax to restore the original surface gloss.

5.2.2 Plastics

For normal cleaning, wash plastic surfaces with a soft cloth, mild detergent, and hot water. Rinse thoroughly and dry with a soft cloth. Do not use solvents or abrasive kitchen cleaners.

5.2.3 Upholstery, cloth, and vinyl

For normal cleaning, wash the upholstery with lukewarm water and a mild, non-abrasive soap. Use a soft cloth or brush. Wipe off any water or soapy water residues with a clean, dry cloth. Let the surface dry. Repeat this procedure to remove stubborn dirt or stains. Ink spots can sometimes be removed with soap and water followed by isopropyl alcohol.

Do not use any other cleaning methods than those listed here. Other cleaning methods may attack and degrade the vinyl and may also void the wheelchair's guarantee.

If necessary, you can remove the cover before cleaning. See also the washing instructions on the upholstery materials.

5.3 Inflating the drive wheel tyres

Only drive the wheelchair with the correct tyre pressure. The tyre pressure for the drive wheel tyres is 250 kPa (35 psi). Permobil recommends that you check the tyre pressure weekly and after any significant change in temperature or altitude.

Incorrect tyre pressure may make the wheelchair unstable and difficult to drive. It may also result in abnormal wear, punctures, a shorter driving range, and damage to the wheel assembly.

This is how you inflate the drive wheel tyres.

1. Unscrew and remove the valve cap from the tyre air valve.
2. Connect the compressed air nozzle to the valve and adjust the tyre pressure to the prescribed level.
3. Put the valve cap back.

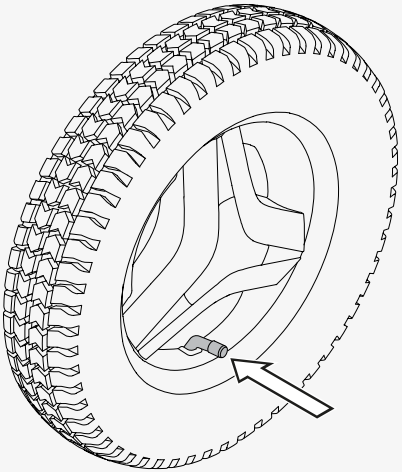

5.4 Inflating the castor wheel tyres

Permobil recommends that you check the tyre pressure weekly and after any significant change in temperature or altitude. Incorrect tyre pressure may make the wheelchair unstable and difficult to drive. It can also result in abnormal wear, a shorter driving range, and damage to the wheel assembly. The tyre pressure for the castor wheel tyres is 250 kPa (35 psi).

This is how you inflate the castor wheel tyres. You need the valve adapter from the wheelchair's tool bag.

1. Unscrew and remove the valve cap from the tyre valve.
2. Attach the valve adapter to the tyre valve.
3. Connect the compressed air nozzle to the valve and adjust the tyre pressure to the correct level.
4. Put the valve adapter back into the tool bag and put the valve cap back.

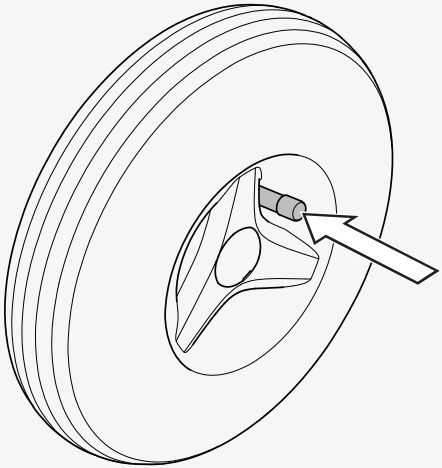

5.5 Positioning belt

Check the condition of the positioning belt regularly in case any damage or wear has occurred. If signs of damage or wear appear, replace the positioning belt immediately through your Permobil dealer.

6 Restrictions and limitations

This chapter contains information about support wheels and seat depth.

The need for support wheels is based on seat depth, maximum speed, and user weight. If your wheelchair is not fitted with support wheels and your weight increases to more than 100 kg (220 lb), support wheels must be installed. Contact your service technician.

Users weighing more than 110 kg (240 lb) must have a seat depth of 445 mm (17") or more. If your wheelchair has a seat depth of less than 445 mm (17") and your weight increases to more than 110 kg (240 lb), contact your service technician.

7 Troubleshooting

The following troubleshooting guide describes a number of faults and events that can occur when you use the wheelchair, together with suggested remedies.

Note that the guide cannot describe all the problems and events that may occur and you should always contact your service provider or Permobil technical support if you need additional assistance. Troubleshooting and repairs of electronics must always be performed by qualified personnel with good knowledge of the wheelchair's electronics.

Event	Possible cause	Remedy
The wheelchair does not start.	The batteries are discharged.	Charge the batteries.
	The cable connection to the control panel has come loose.	Insert the cable in the control panel.
	The main circuit breaker is turned off.	Turn on the main circuit breaker. See page 39.
	The main circuit breaker has tripped.	Reset the main circuit breaker once. See page 39.
The wheelchair cannot be charged.	The main circuit breaker is turned off.	Turn on the main circuit breaker. See page 39.
	The charging circuit breaker has tripped.	Wait five minutes. The charging circuit breaker will automatically reset.

Event	Possible cause	Remedy
The wheelchair cannot be driven.	The battery charger is connected.	Disconnect the battery charger.
	The wheelchair is in freewheel mode.	Exit freewheel mode and restart the wheelchair.
	The wheelchair is locked.	Unlock the wheelchair.
	A seat function has triggered the automatic drive inhibit.	Make sure that the backrest and the leg rest are not tilted and that the seat is not tilted or lifted.
	The motors have become too warm.	Turn off the wheelchair and wait for the motors to cool down.
The wheelchair switches itself off after a certain period of inactivity (20–30 minutes).	The energy saving mode has been activated.	Press the start button on the control panel to turn on the wheelchair again.
The wheelchair stops while being driven.	The main circuit breaker has tripped.	Reset the main circuit breaker once. See page 39.
The wheelchair can only be driven at reduced speed.	A seat function has triggered the automatic speed restriction.	Make sure that the backrest and the leg rest are not tilted and that the seat is not tilted or lifted.

8 General information

This chapter contains information about guarantees, standards and regulations, reporting incidents, disposal, and technical specifications.

8.1 Guarantee

All power wheelchairs are supplied with a two-year product guarantee. Batteries and chargers are supplied with a one-year guarantee.

Product Guarantee Information sets forth the conditions of the guarantee. For further information about applicable guarantees, see https://permobilus.com/support/warranties/.

8.2 Standards and regulations

This product fulfils the following requirements:

- Electrically powered wheelchairs, scooters and their chargers – Requirements and test methods (EN 12184)
- Wheelchair standard series ISO 7176
- U.S. Food and Drug Administration's regulation 21 CFR 820
- Medical Device Regulation (EU) 2017/745

8.3 Reporting incidents

If an incident occurs, please contact Permobil by phone or e-mail.

8.4 Disposal and recycling

Contact Permobil for information about disposal agreements in force.

8.5 Technical specifications

Mass of the heaviest part	Backrest 7.5 kg (16.5 lb.)
Pivot width	1200 mm (47")
Minimum turning diameter	1490 mm (59")
Required width of angled corridor	860 mm (34")
Required doorway entry depth	1330 mm (52")
Required corridor width for side opening	900 mm (35")
Ground clearance	80 mm (3")
Ability to negotiate obstacles (approach distance 0 cm [0"])	65 mm (2.5")
Ability to negotiate obstacles (approach distance 50 cm [20"])	75 mm (3")
Battery cycle life	450 cycles
Battery type and nominal voltage	Sealed lead acid, 2 x 12 V, group 24
Occupant mass group	III

How to contact your production unit

Timrå, Sweden

PU TIM
Permobil AB
Per Uddéns väg 20
SE 861 36 Timrå
Sweden

+46 60 59 59 00

+46 60 57 52 50

info@permobil.com

www.permobil.com

Nashville, USA

PU NAS
Permobil Inc.
300 Duke Drive
Lebanon, TN 37090
USA

+1 800 736 0925

+1 800 231 3256

support@permobil.com

www.permobil.com

How to contact your local office

Greece, Hungary, Iceland, Israel, Saudi Arabia, Poland, South Africa, Turkey, United Arab Emirates

Permobil AB

Box 120

SE 861 23 Timrå

Sweden

+46 60 59 59 00

info@permobil.com

www.permobil.com

PU TIM

China, Hong Kong, India, Malaysia, Singapore South Korea, Taiwan, Thailand

Permobil

No.128 Tian Mu Road West/上海市静安区天目西路128号

Shanghai

China

+86 4000 178 179

Contact.BRAPAC@permobil.com

www.permobil.com

PU TIM

New Zealand

Permobil New Zealand
181A McLeod Road
Te Atatu South, Auckland, 0610
New Zealand

+64 0800 115 222

Sales.NZ@permobil.com or
Tech.NZ@permobil.com

www.permobil.co.nz

PU NAS

Ireland, United Kingdom

Permobil Ltd.
Regus 6th floor, 2 Kingdom
Street, Paddington
W2 6BD London
United Kingdom

+44 1484 722 888

+44 1484 723 013

info@permobil.uk

www.permobil.com

PU TIM

Dealer’s address and telephone number

permobil

335322 eng-UK

7 330818 353566

www.permobil.com